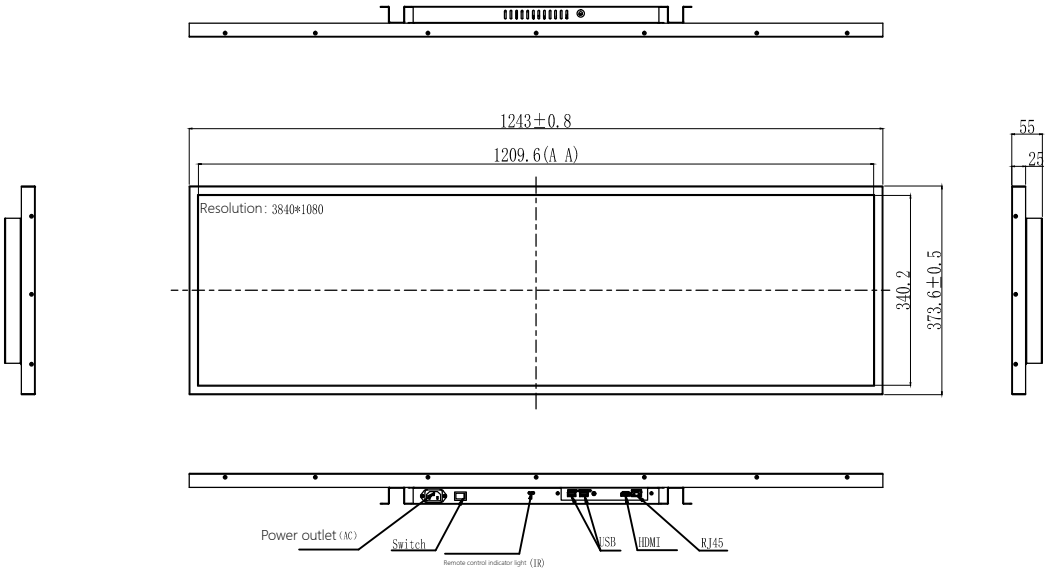

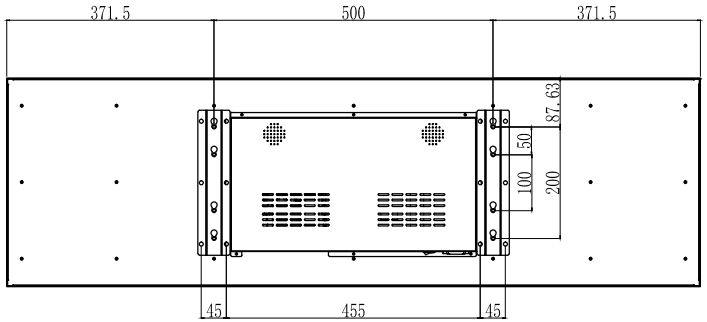

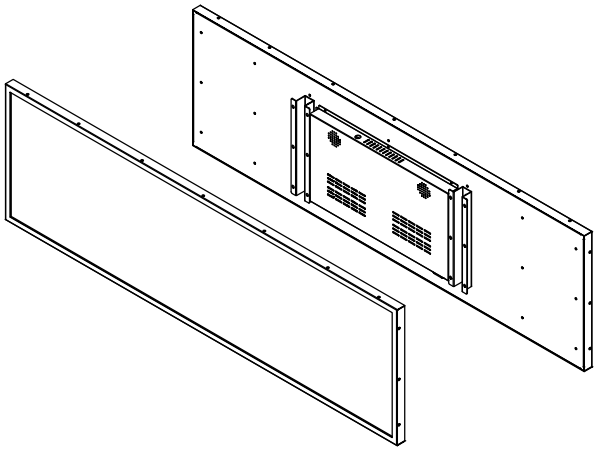

First perspective

General tolerance (unit: mm)	F	M
0----200	±0.3	
200--500	±0.5	
500--800	±0.7	
800--1200	±1.0	
1200--	±1.5	

Model type	T495XXS540-L01-V1	Version	A0	Material	
Part Number		Page	1/1	49.5″complete machine	
Drawing No					
Design		To examine		Ratify		Date	