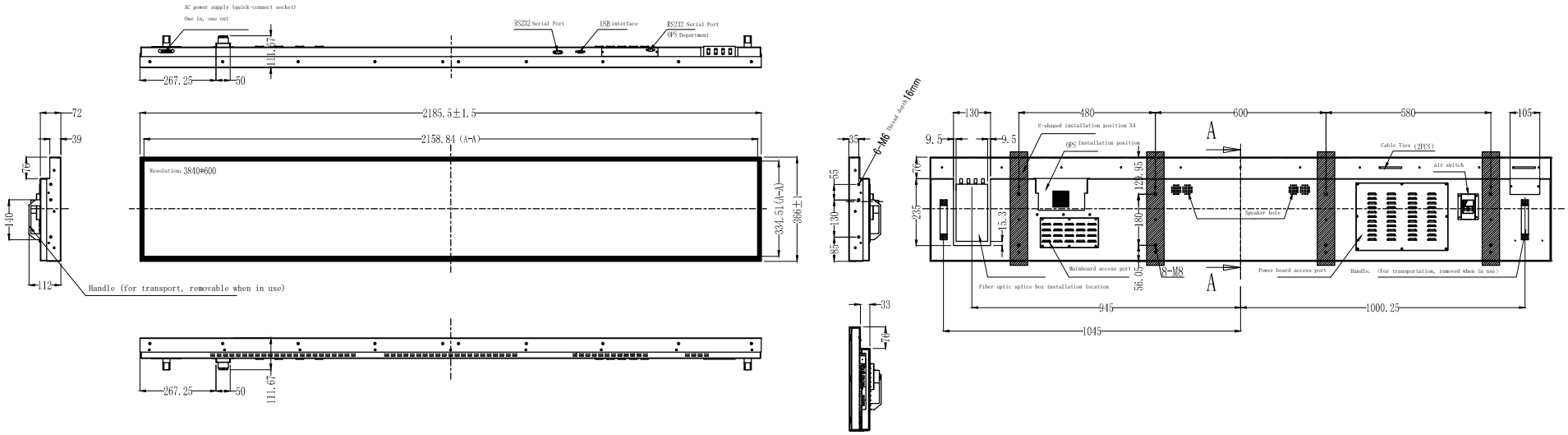

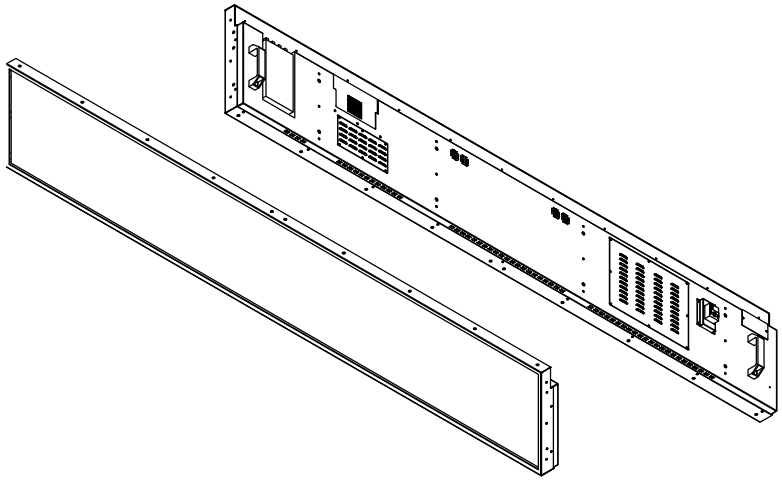

First perspective

General tolerance (unit: mm)	F	M
0----200	±0.3	
200--500	±0.5	
500--800	±0.7	
800--1200	±1.0	
1200--	±1.5	

Model type	10.T.T860XXS600-L01-V9		Version	A0	Material
Part Number			Page	1/1	86″complete machine
Drawing No					
Design		To examine		Ratify	Date