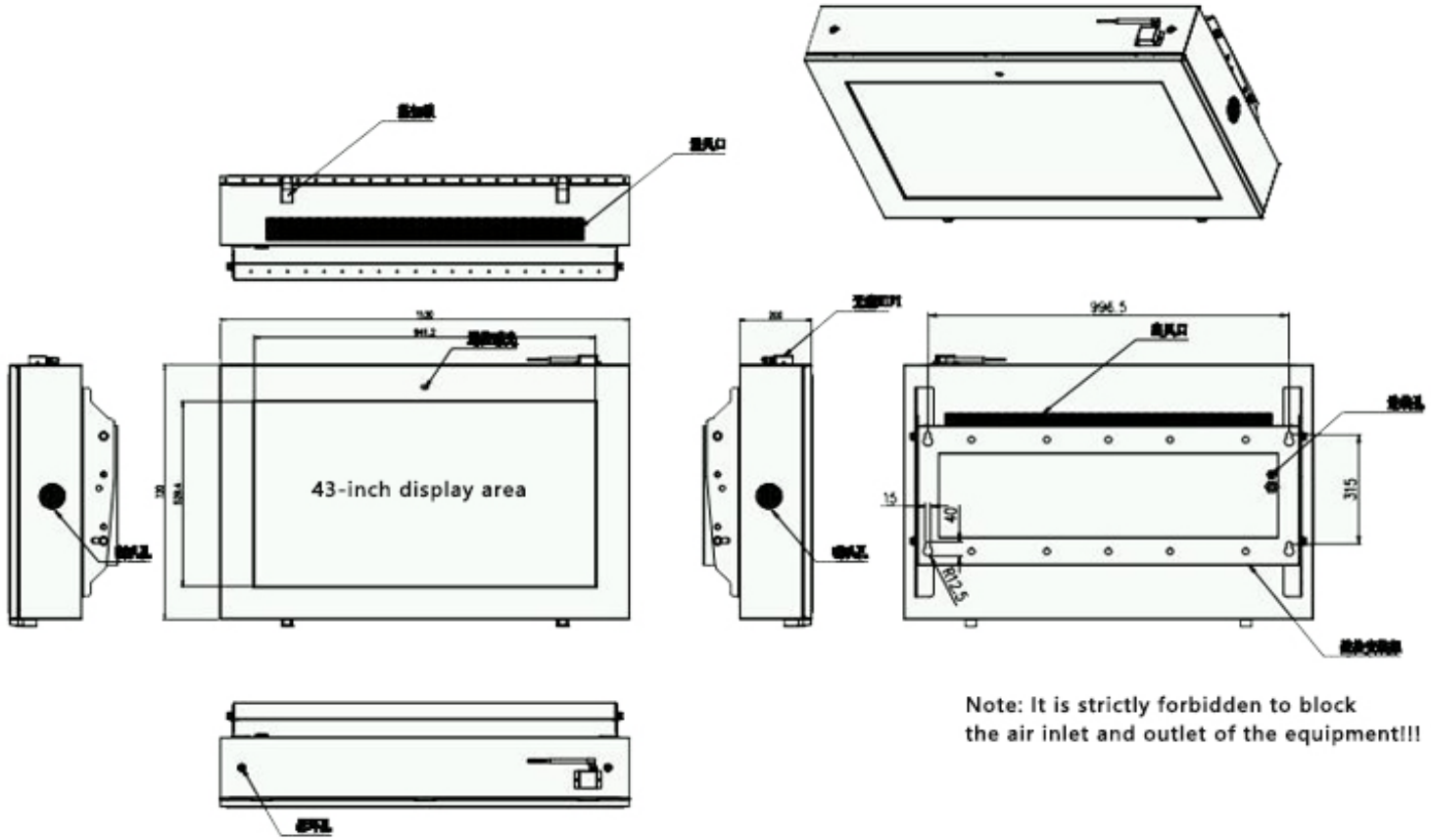

Note: It is strictly forbidden to block
the air inlet and outlet of the equipment!!!

First perspective

General tolerance (unit: mm)	F	M
0----200	±0.3	
200--500	±0.5	
500--800	±0.7	
800--1200	±1.0	
1200--	±1.5	

Model type	10.T.T43000S108001-1			Version	A0	Material	
Part Number				Page	1/1	43″complete machine	
Drawing No							
Design		To examine		Ratify		Date	